AM Transmitter 20 -50 W

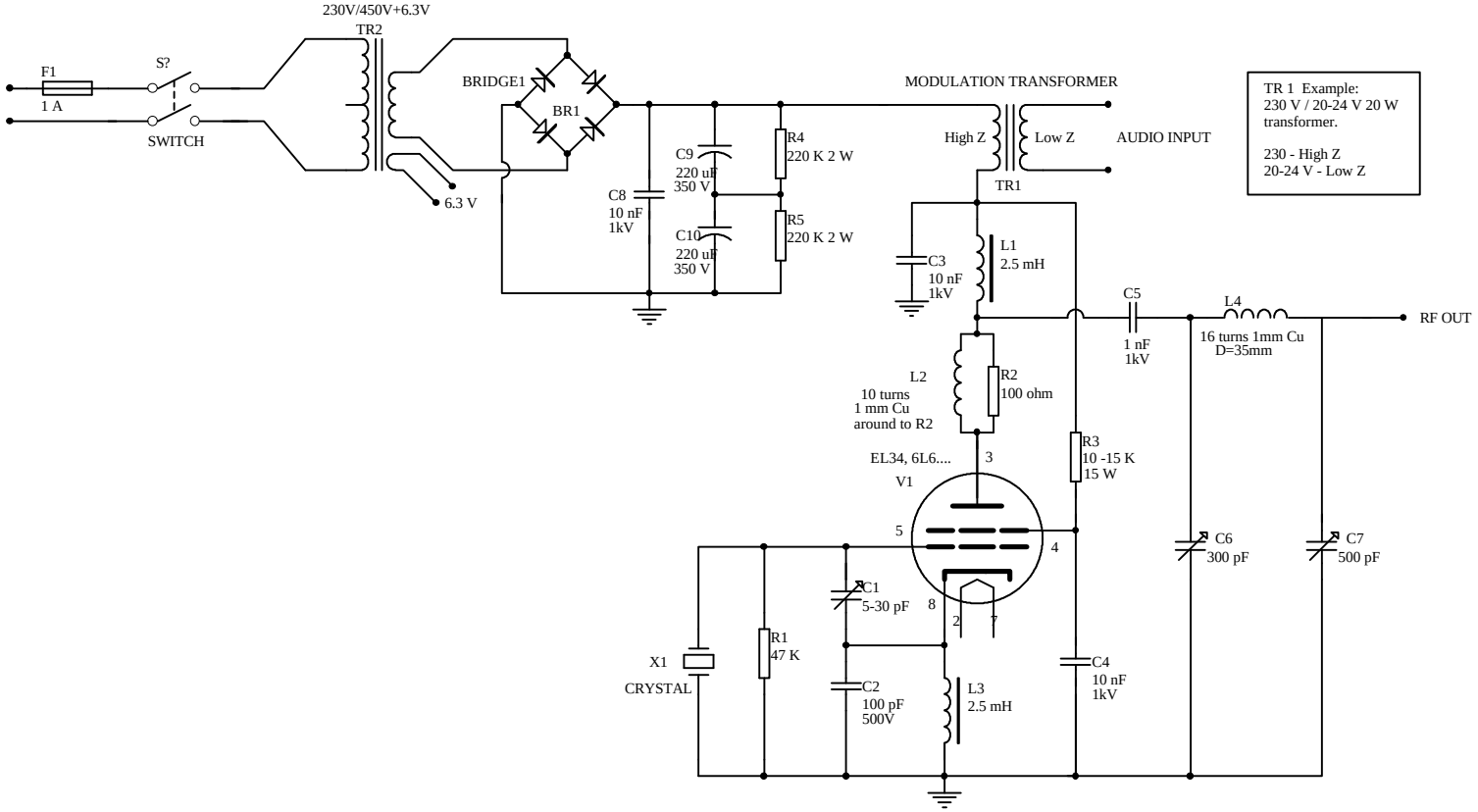

TR 1 Example:
230 V / 20-24 V 20 W
transformer.

230 - High Z
20-24 V - Low Z